Q_40

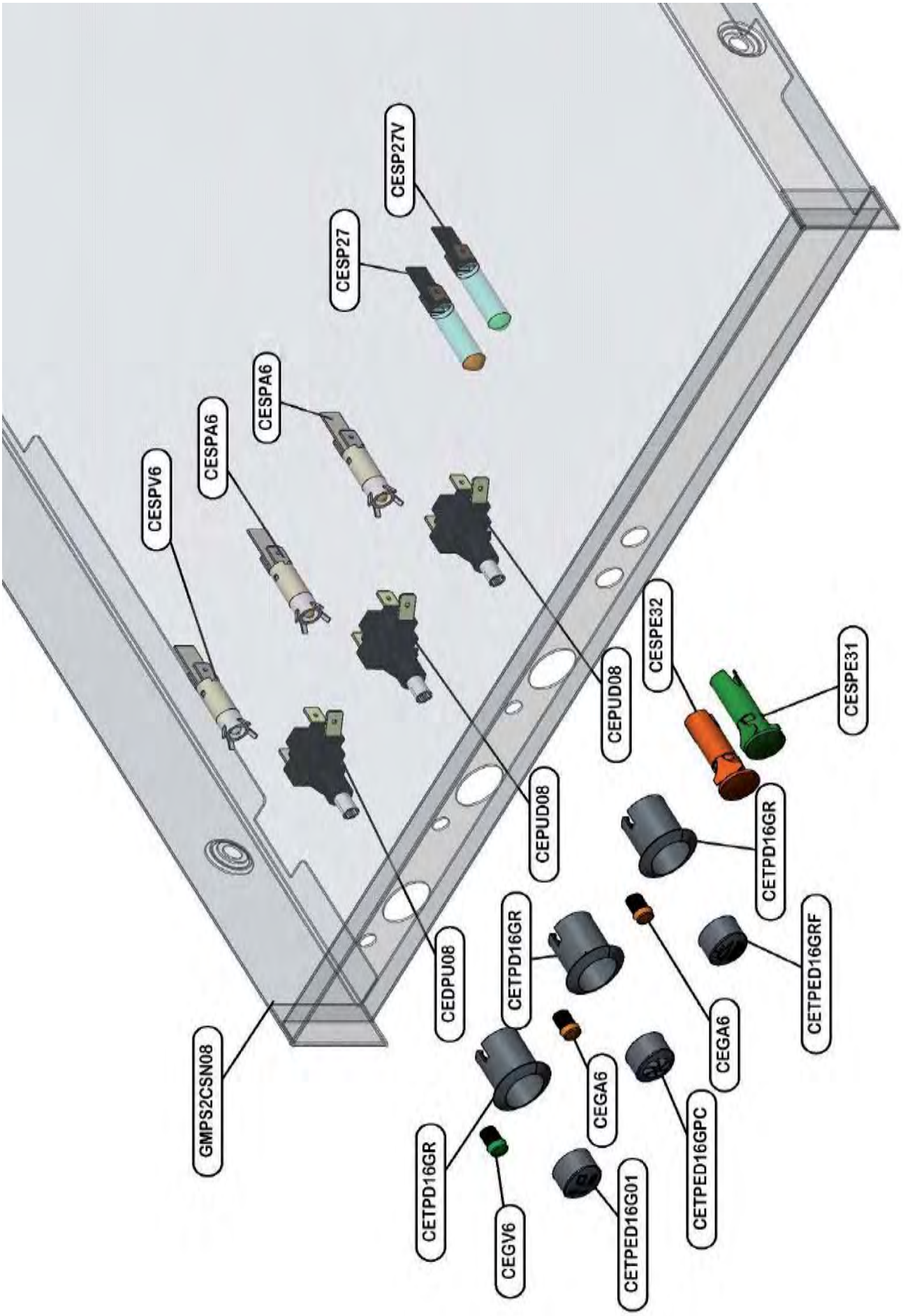
CESP27V
CESP27
CESPA6
CESPA6
CESPV6
CEPUD08
CEPUD08
CESPE32
CESPE31
CETPD16GR
CETPED16GRF
CEDPU08
CETPD16GR
CEGA6
CEGA6
GMPS2CSN08
CETPD16GR
CETPED16GPC
CEGV6
CETPED16G01

Q_40

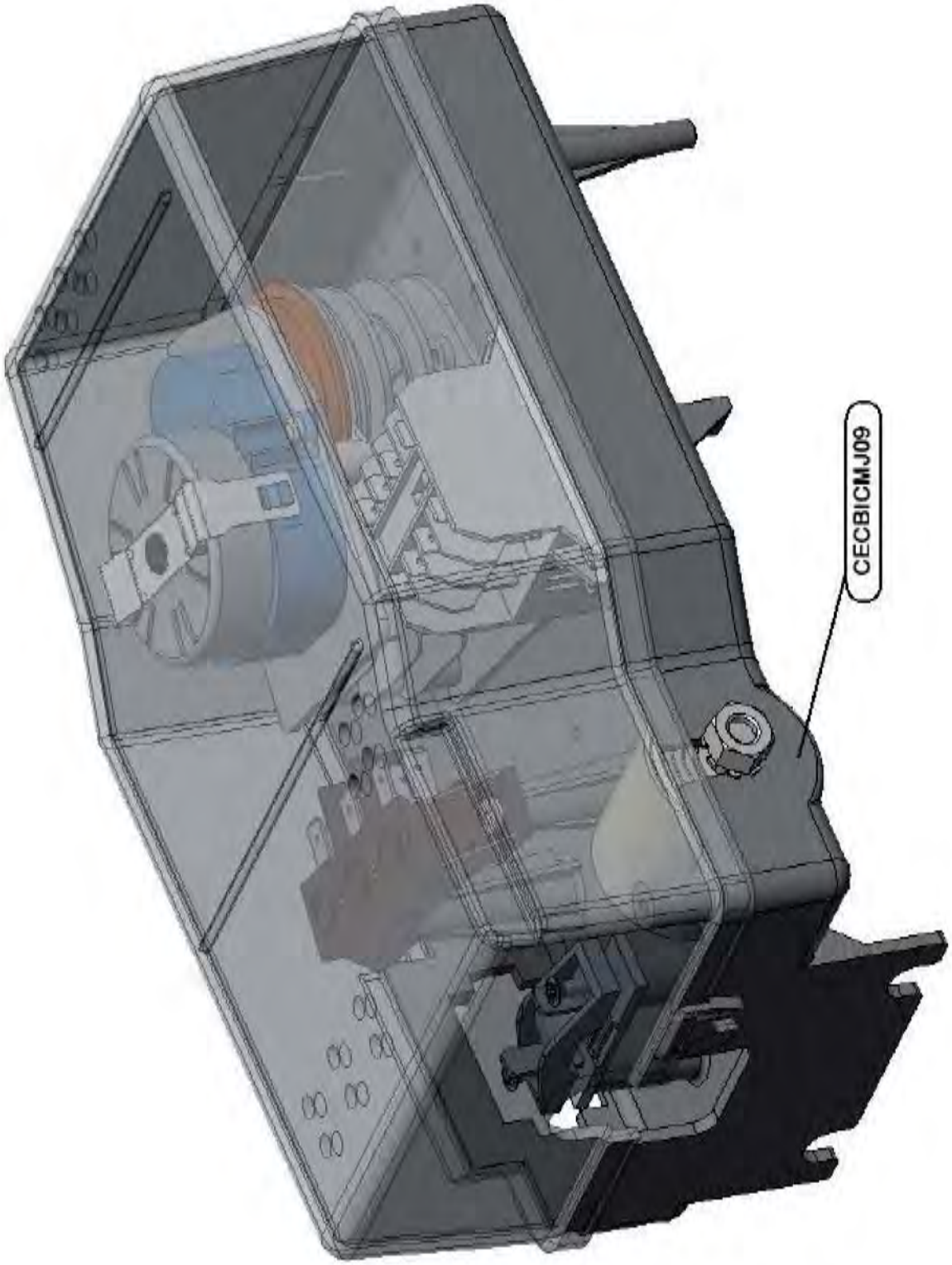

Q_40

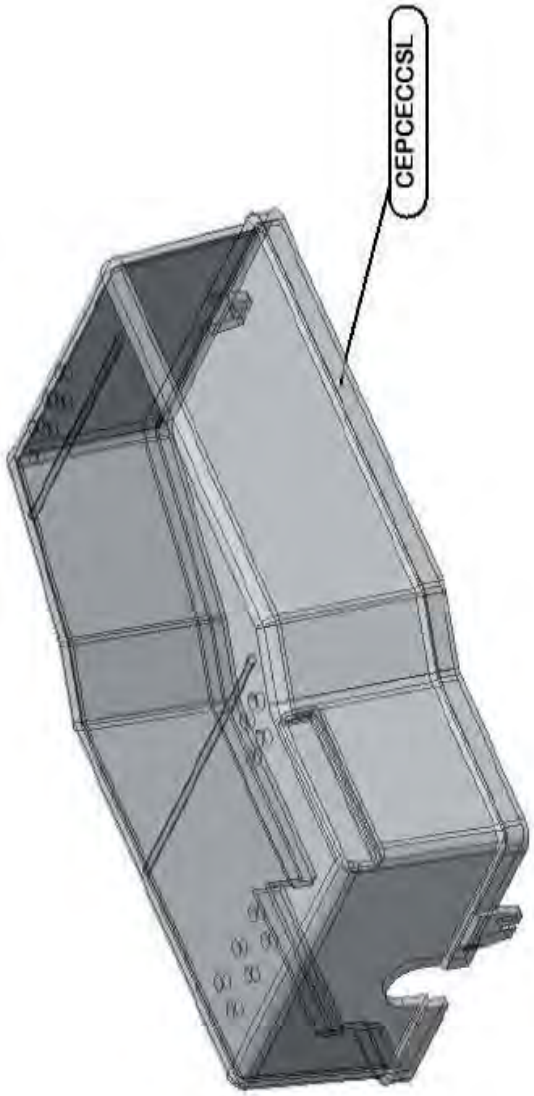

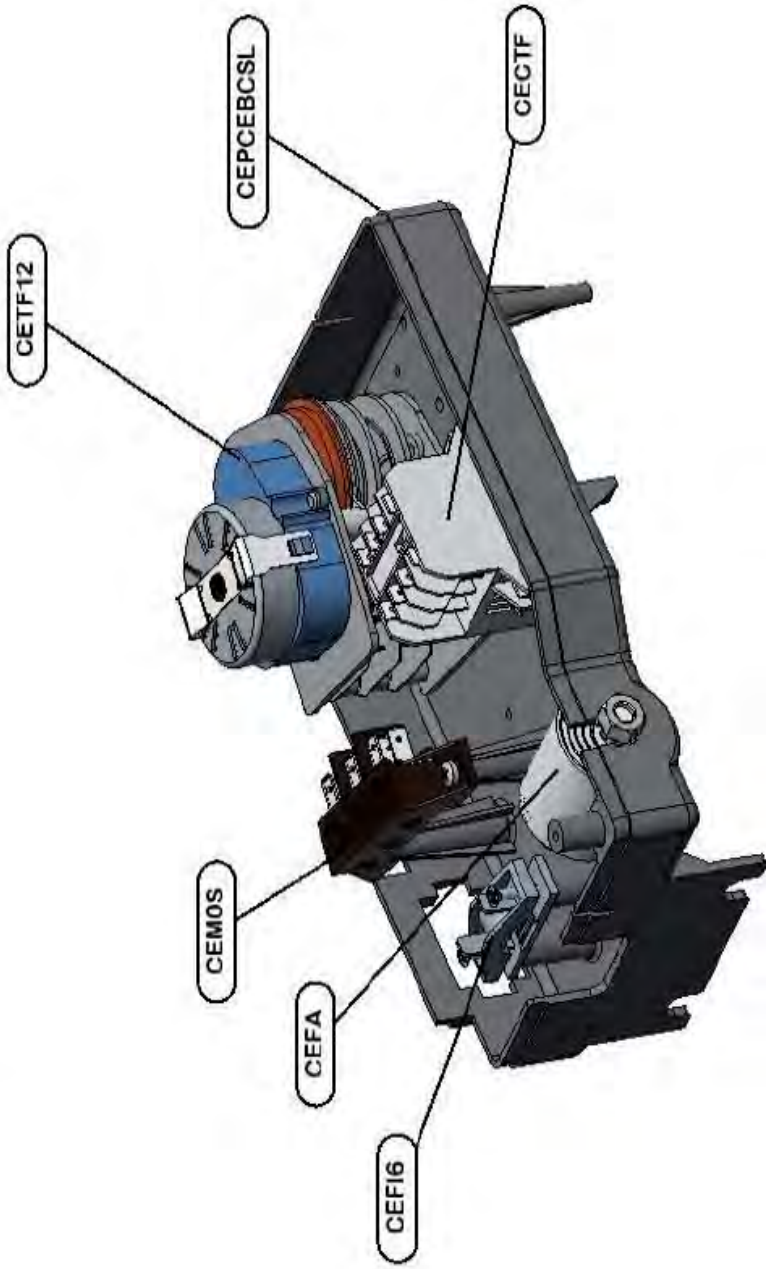

Q_40

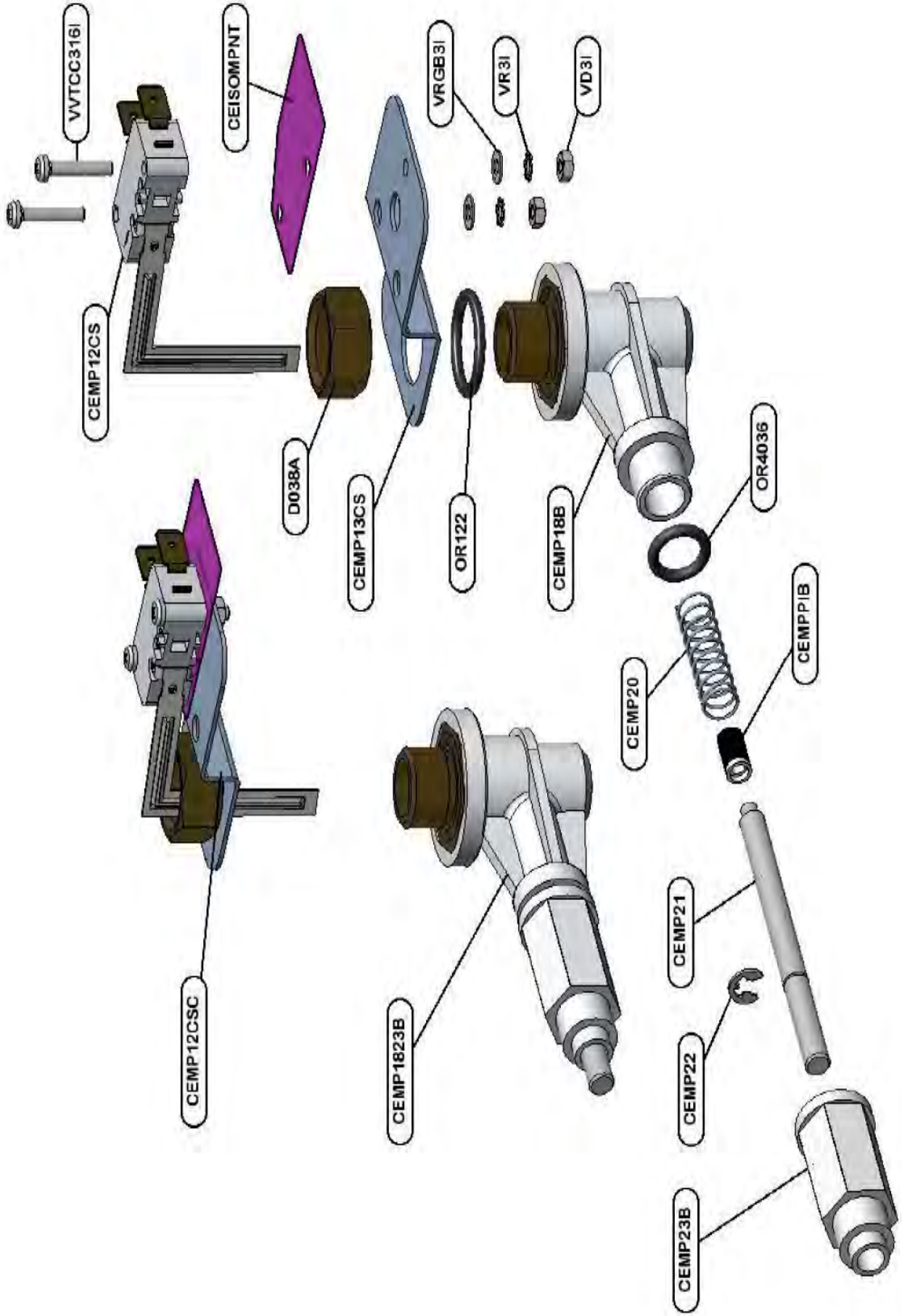
VVTCC316I
CEISOMPNT
VRGB3I
VR3I
VD3I
CEMP12CS
D038A
CEMP13CS
OR122
CEMP18B
OR4036
CEMPPIB
CEMP20
CEMP12CSC
CEMP1823B
CEMP21
CEMP22
CEMP23B

Q_40

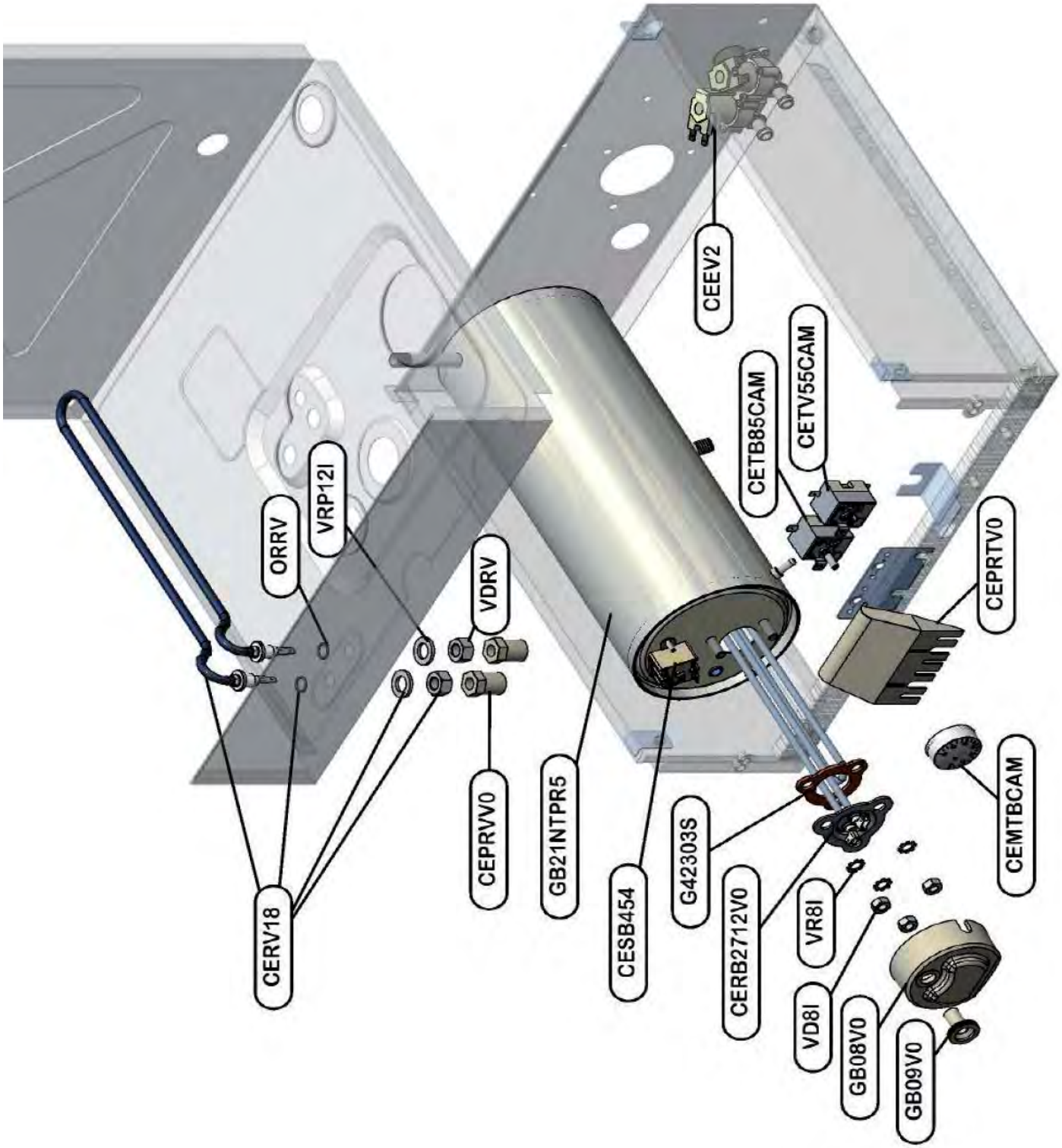
CERV18
ORRV
VRP12I
CEPRVV0
VDRV
GB21NTPR5
CESB454
G42303S
CEEV2
CERB2712V0
CETB85CAM
CETV55CAM
VR8I
VD8I
GB08V0
GB09V0
CEPRTV0
CEMTBCAM

Q_40

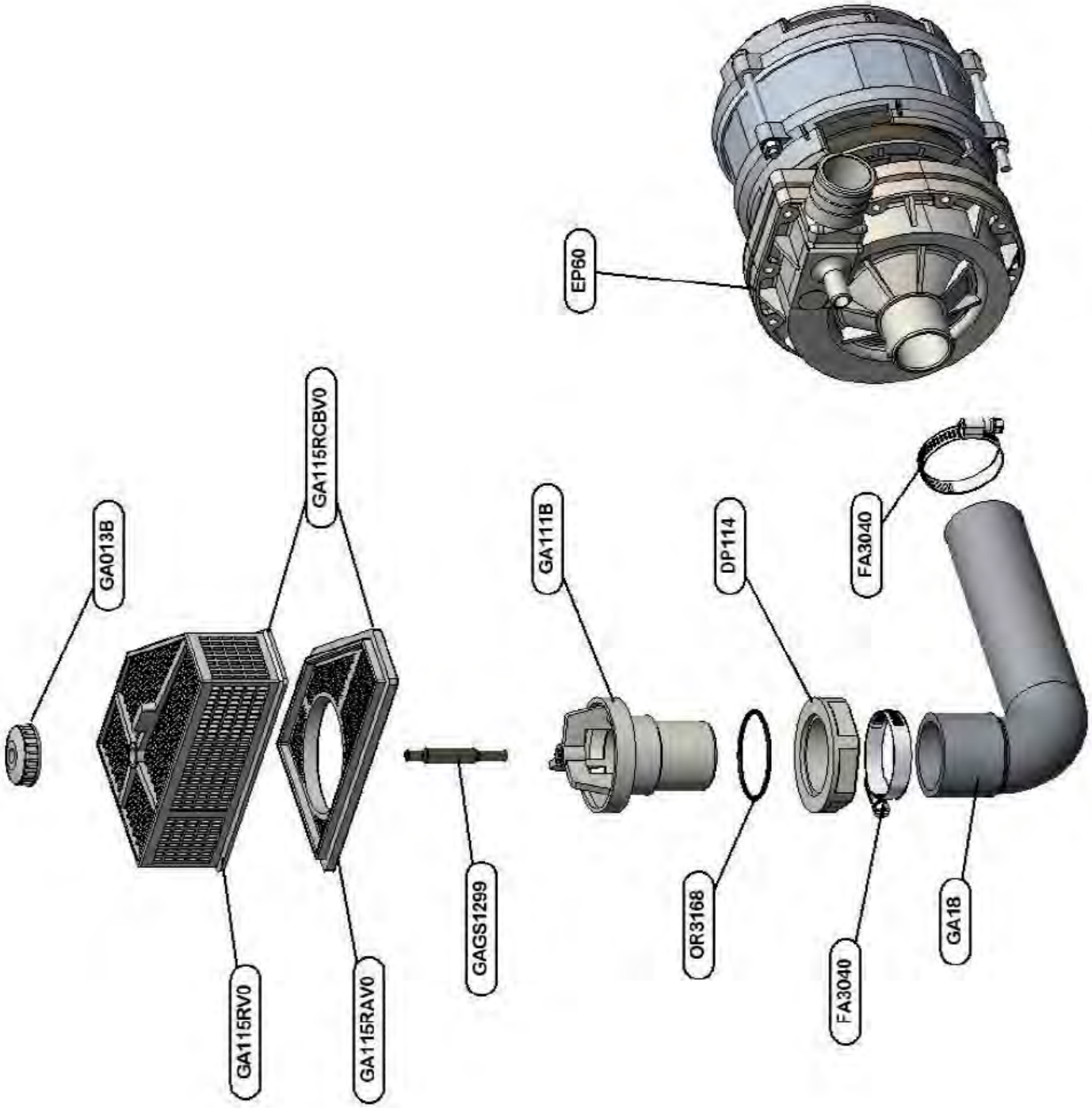
GA013B
GA115RV0
GA115RCBV0
GA115RAV0
GAGS1299
GA111B
OR3168
DP114
FA3040
FA3040
GA18
EP60

Q_40

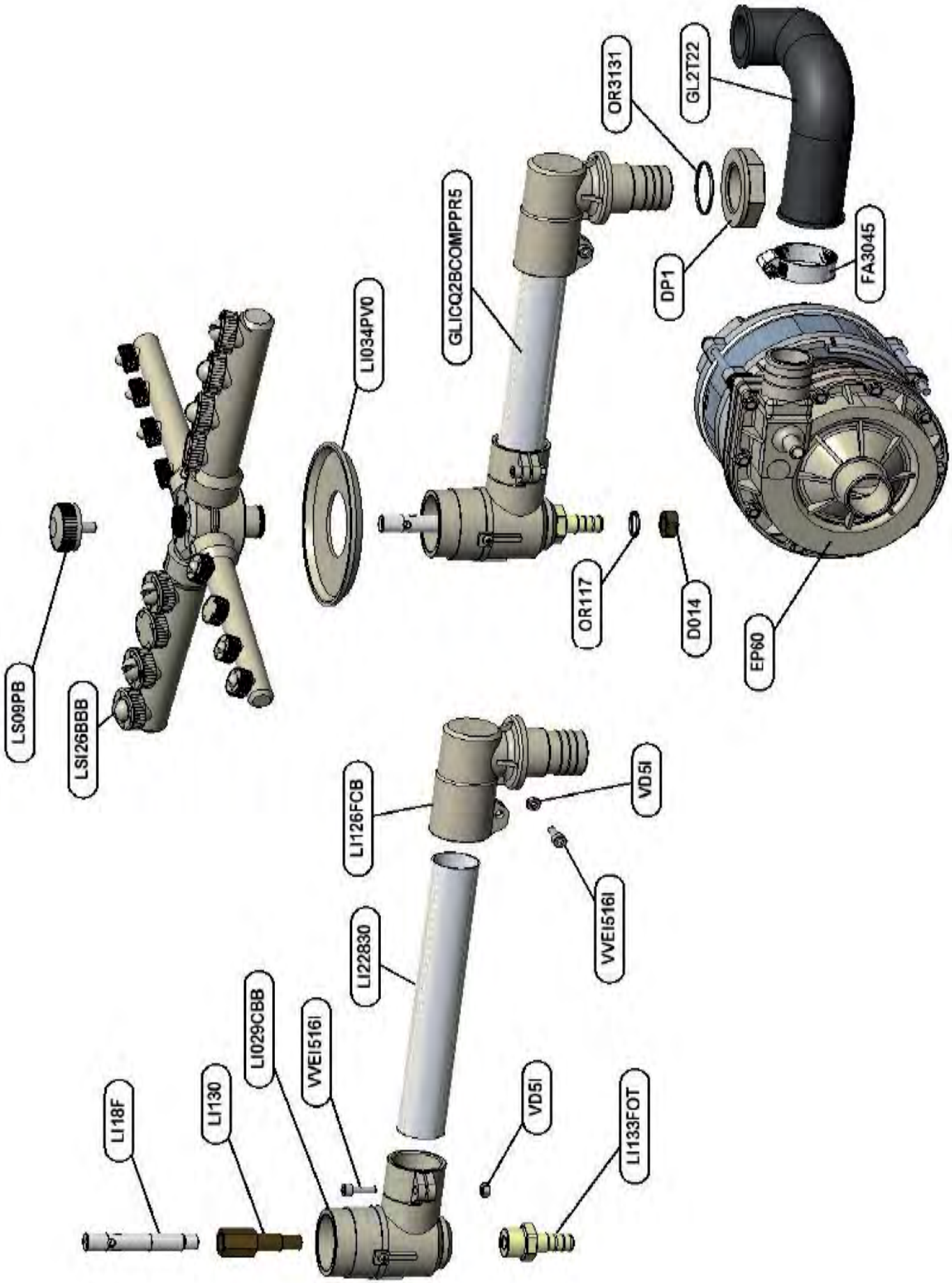
LS09PB
LSI26BBB
LI034PV0
GLICQ2BCOMPPR5
OR3131
GL2T22
DP1
FA3045
OR117
D014
EP60
LI126FCB
VD5I
VVEI516I
LI22830
LI029CBB
VVEI516I
LI18F
LI130
VD5I
LI133FOT

Q_40

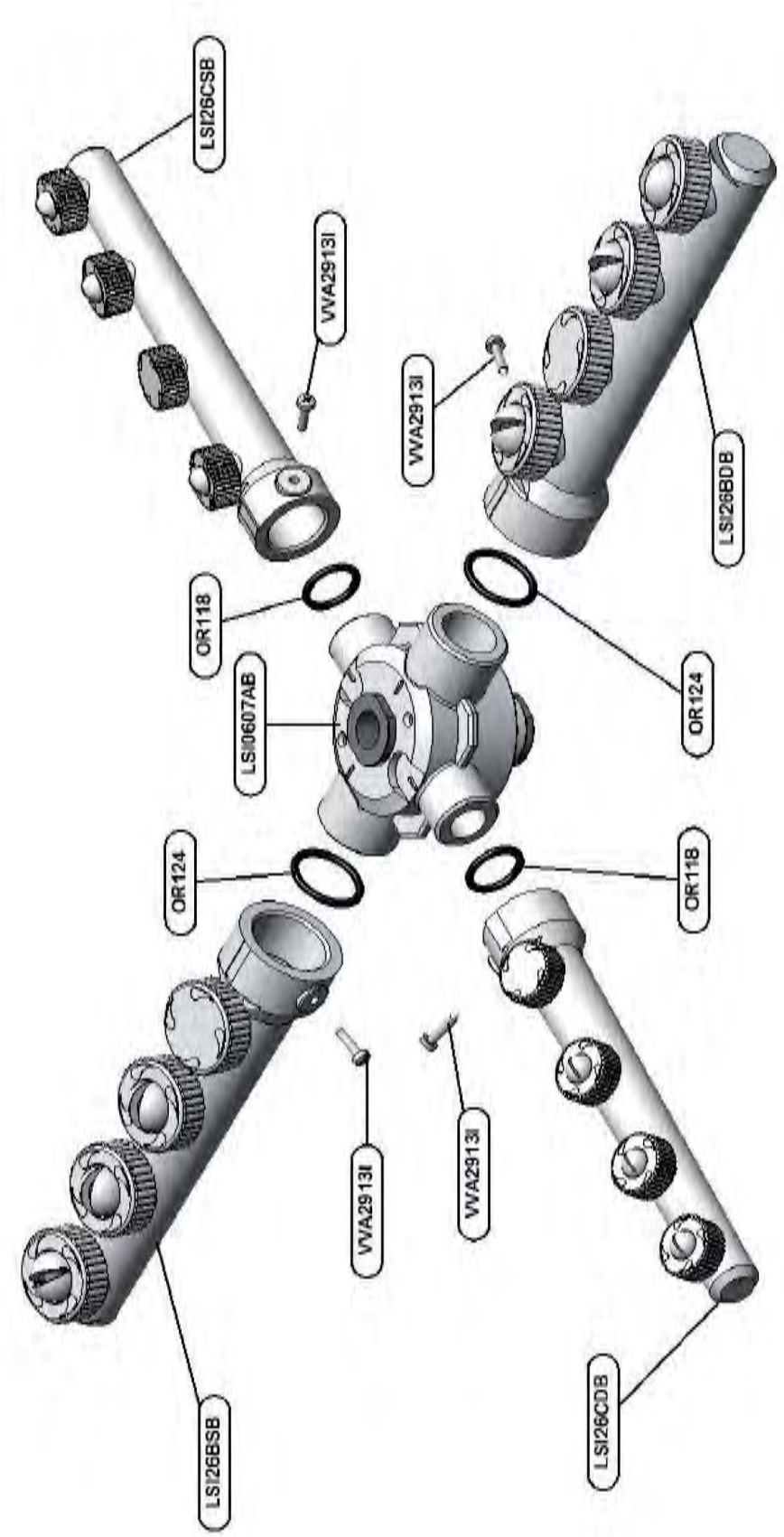
LSI26CSB
VVA2913I
OR118
LSI0607AB
OR124
LSI26BSB
VVA2913I
VVA2913I
VVA2913I
OR124
OR118
LSI26BDB
LSI26CDB

Q_40

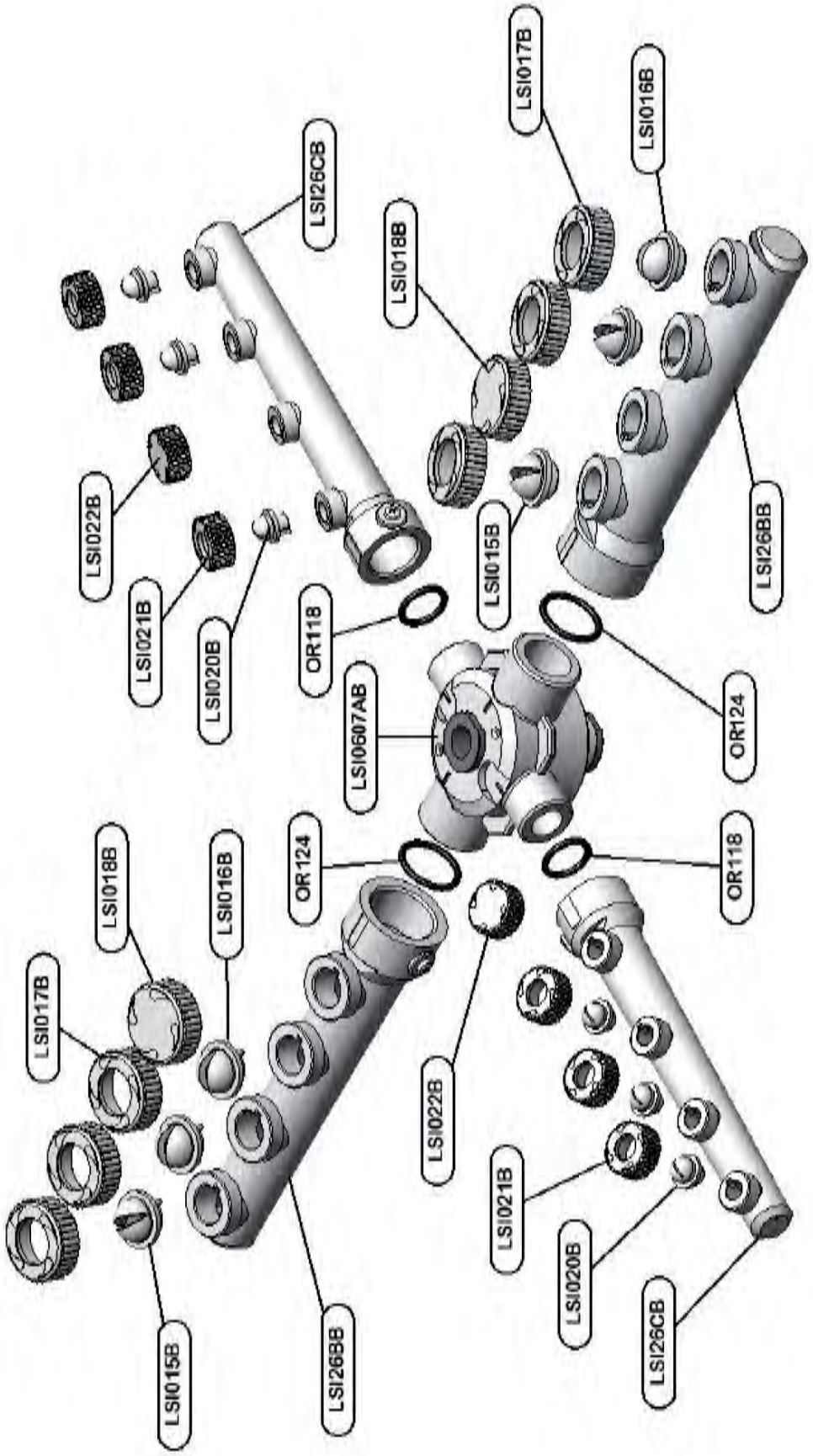
LSI017B
LSI018B
LSI016B
LSI015B
LSI26BB
LSI26CB
LSI022B
LSI021B
LSI020B
OR11B
LSI0607AB
OR124
OR124
OR11B
LSI022B
LSI021B
LSI020B
LSI26CB
LSI017B
LSI018B
LSI016B
LSI015B
LSI26BB

Q_40

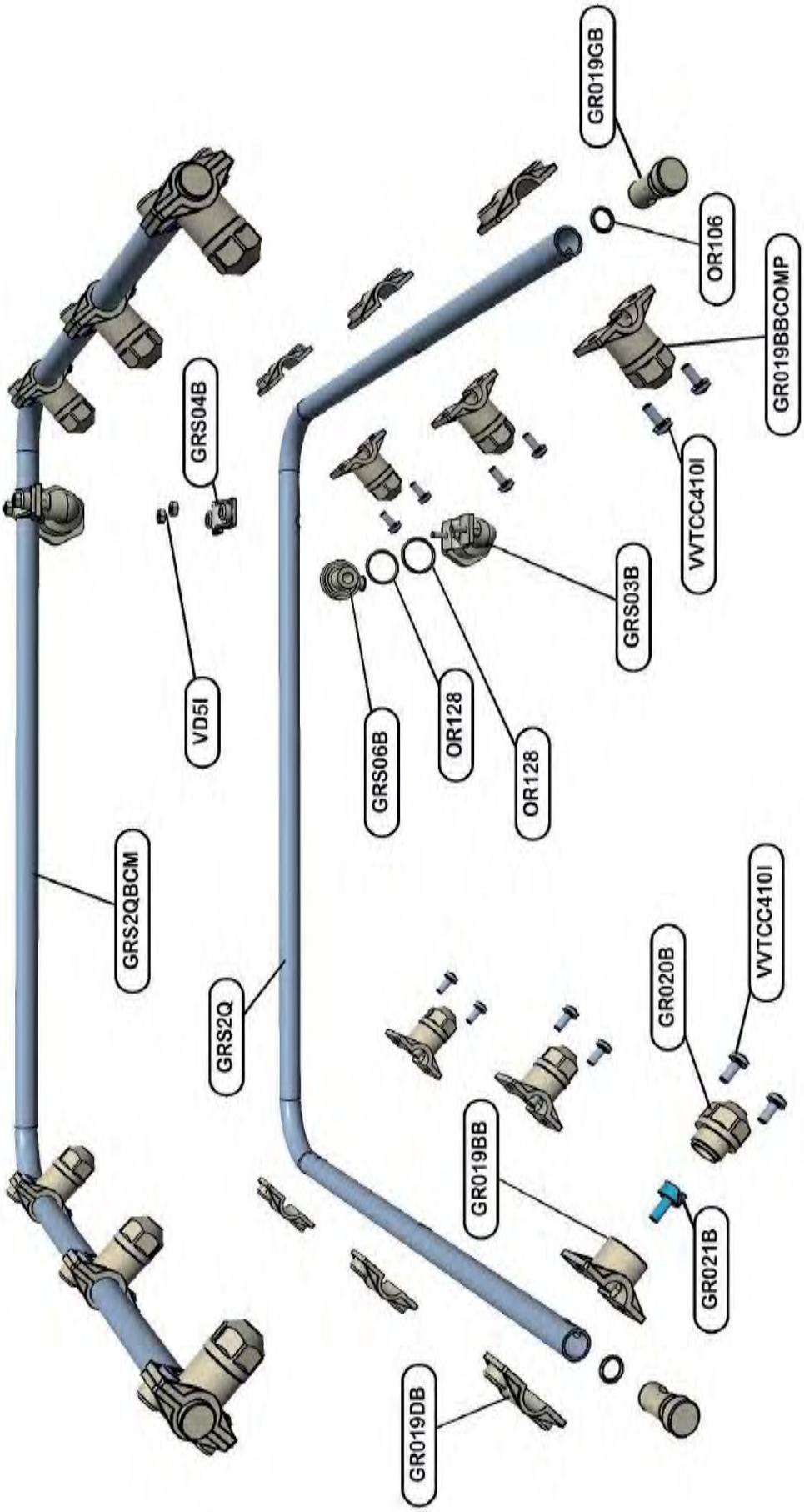
GR019GB
OR106
GR019BBCOMP
GRS04B
VTCC410I
GRS03B
VD5I
GRS06B
OR128
OR128
GRS2QBCM
VTCC410I
GR020B
GRS2Q
GR019BB
GR021B
GR019DB

Q_40

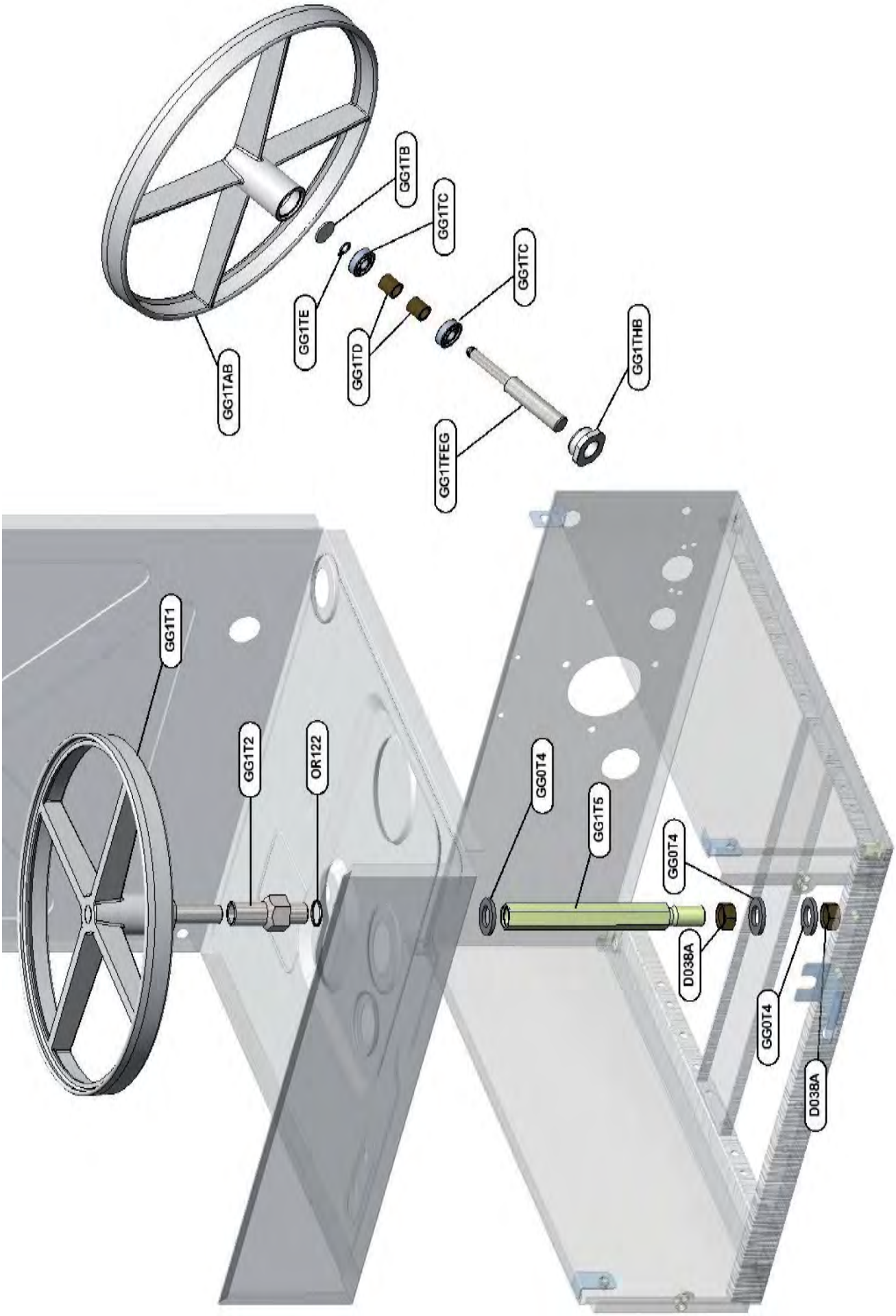
GG1TAB
GG1TE
GG1TB
GG1TC
GG1TD
GG1TC
GG1TFEG
GG1THB
GG1T1
GG1T2
OR122
GG0T4
GG1T5
GG0T4
D038A
GG0T4
D038A

Q_40

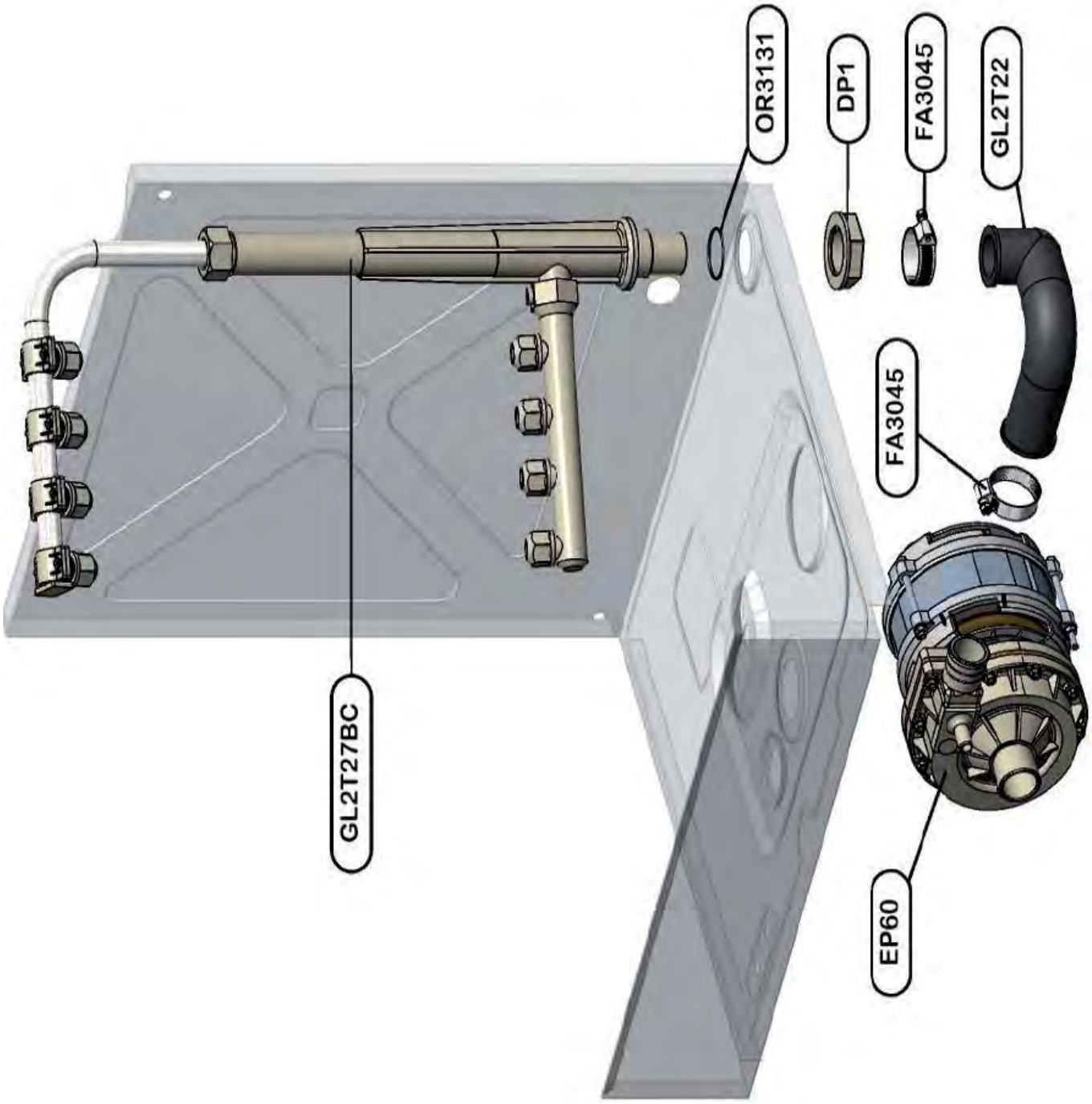

Q_40

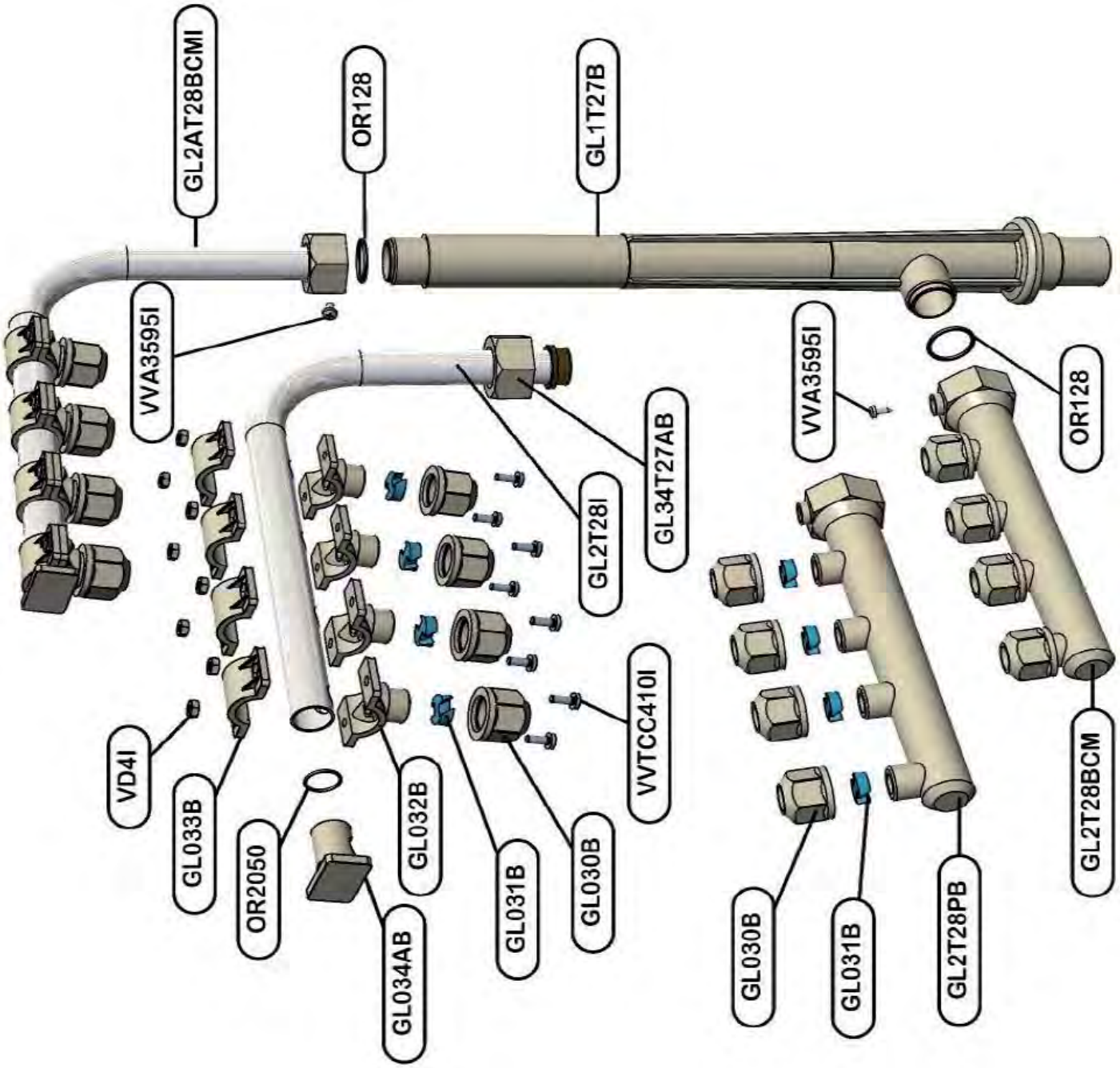
GL2AT28BCMI
OR128
GL1T27B
VVA3595I
GL34T27AB
GL2T28I
VVA3595I
OR128
VD4I
GL033B
OR2050
GL034AB
GL032B
GL031B
GL030B
VVTCC410I
GL030B
GL031B
GL2T28PB
GL2T28BCM

Rozkres

Q_40

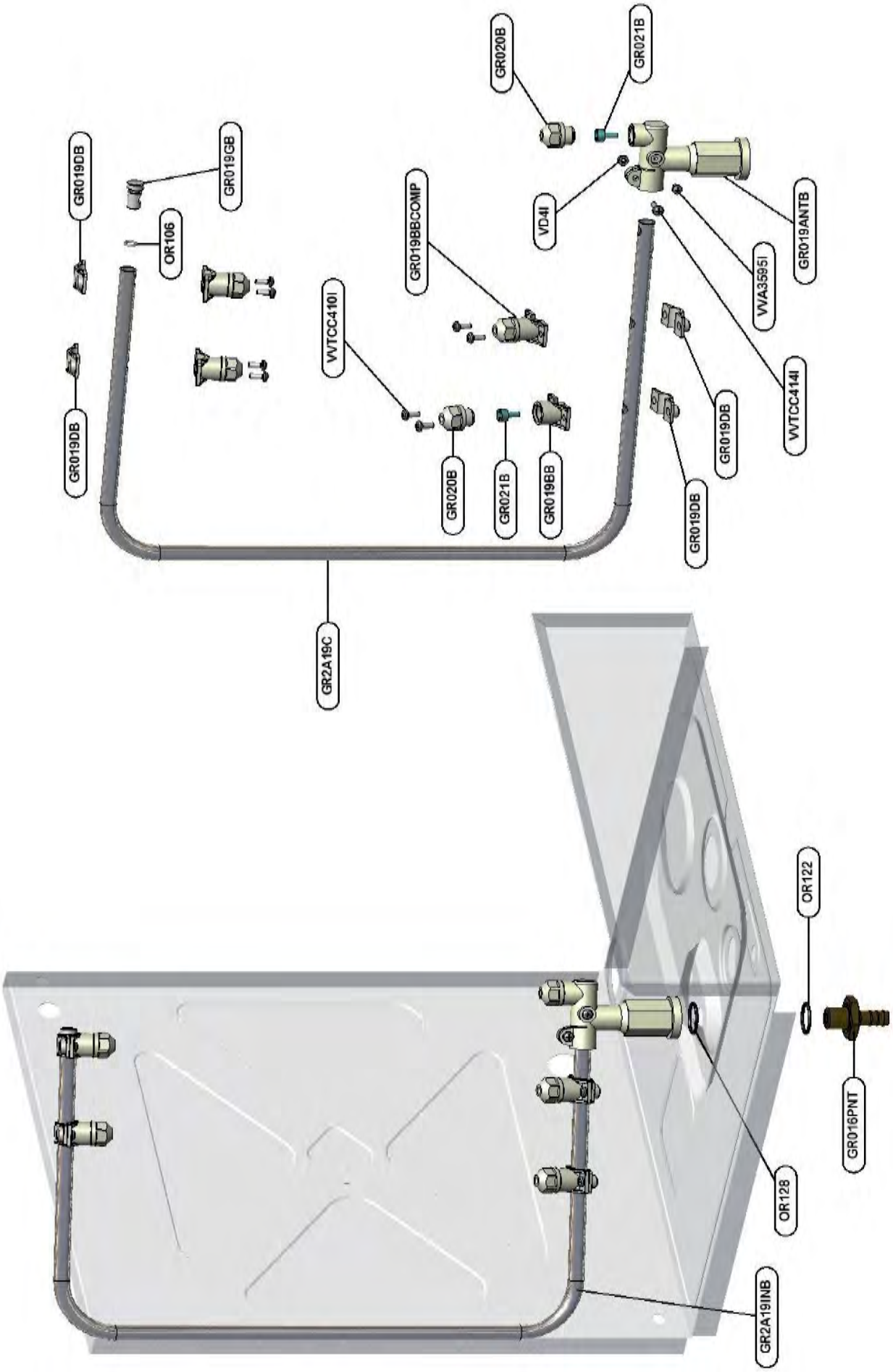
GR019DB
GR019DB
OR106
GR019GB
GR2A19C
VVTCC410I
GR020B
GR021B
GR019BB
GR019BBCOMP
VD4I
GR020B
GR021B
GR019DB
GR019DB
VVTCC414I
VVA3595I
GR019ANTB
OR128
GR2A19INB
OR122
GR016PNT

Q_40

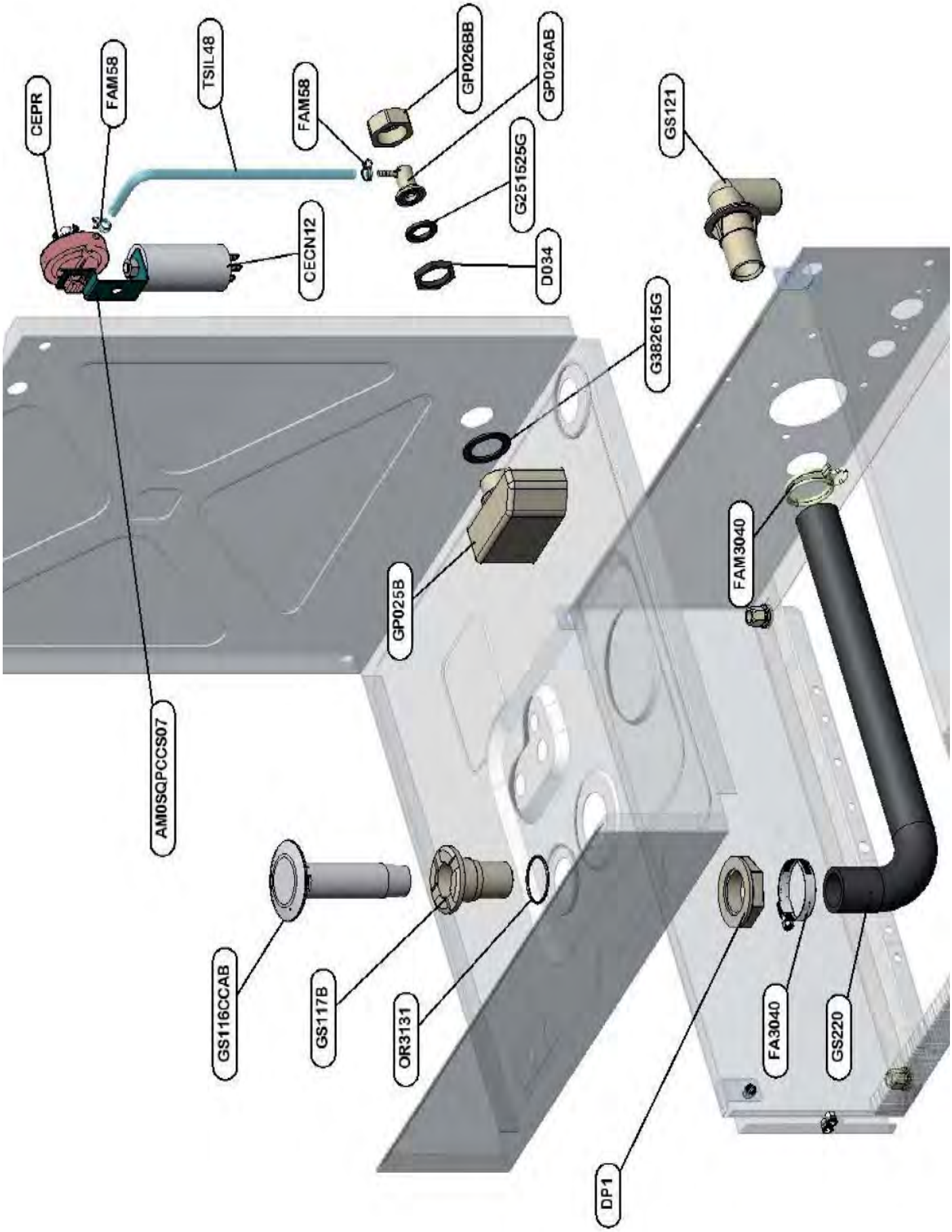
CEPR
FAM58
TSIL48
FAM58
GP026BB
GP026AB
G251525G
D034
CECN12
GS121
G382615G
GP025B
FAM3040
AM05QPCCS07
GS116CCAB
GS117B
OR3131
FA3040
GS220
DP1

Rozkres

Q_40

REDFOX®
RM GASTRO GROUP

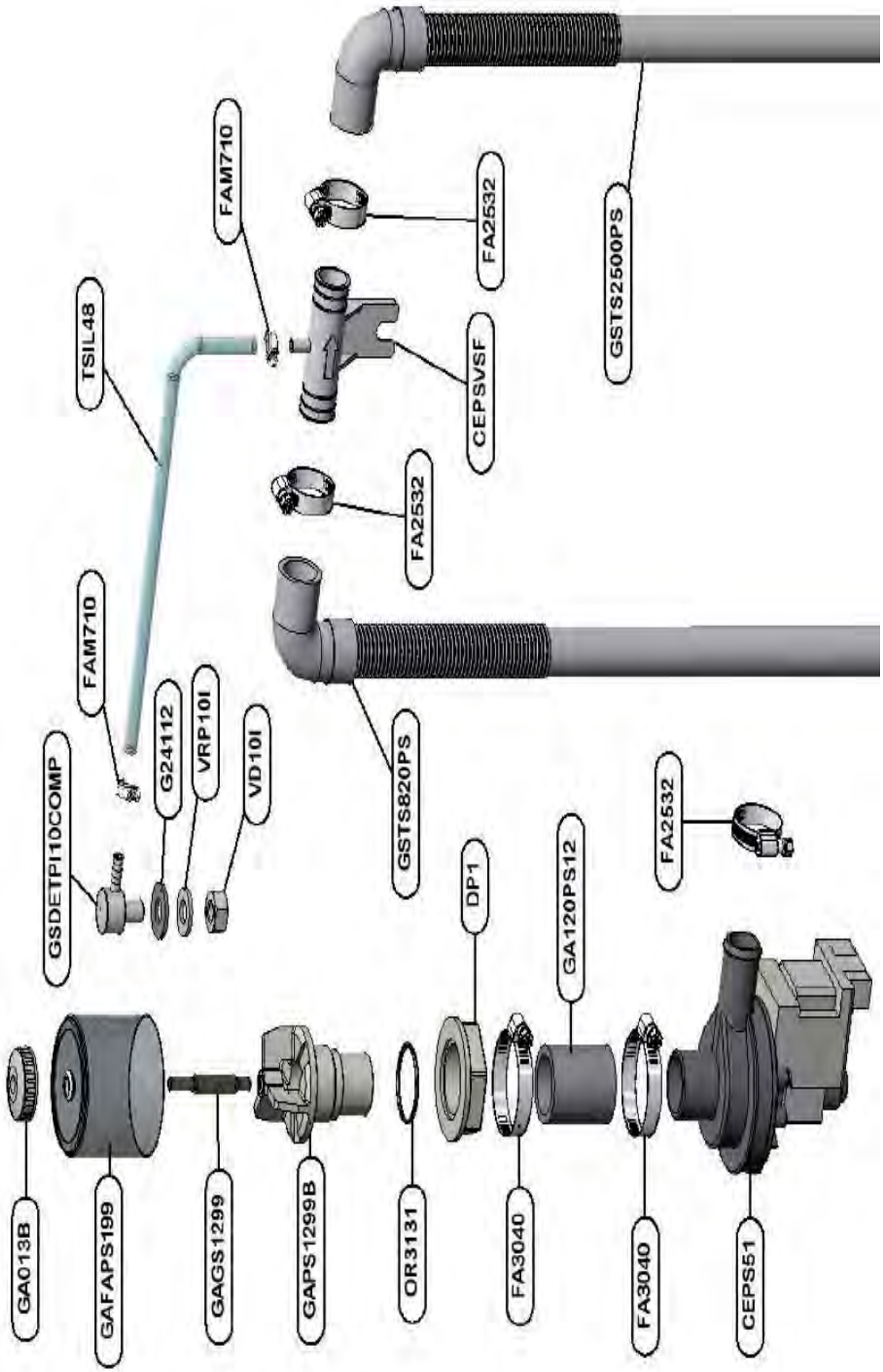

Rozkres

Q_40

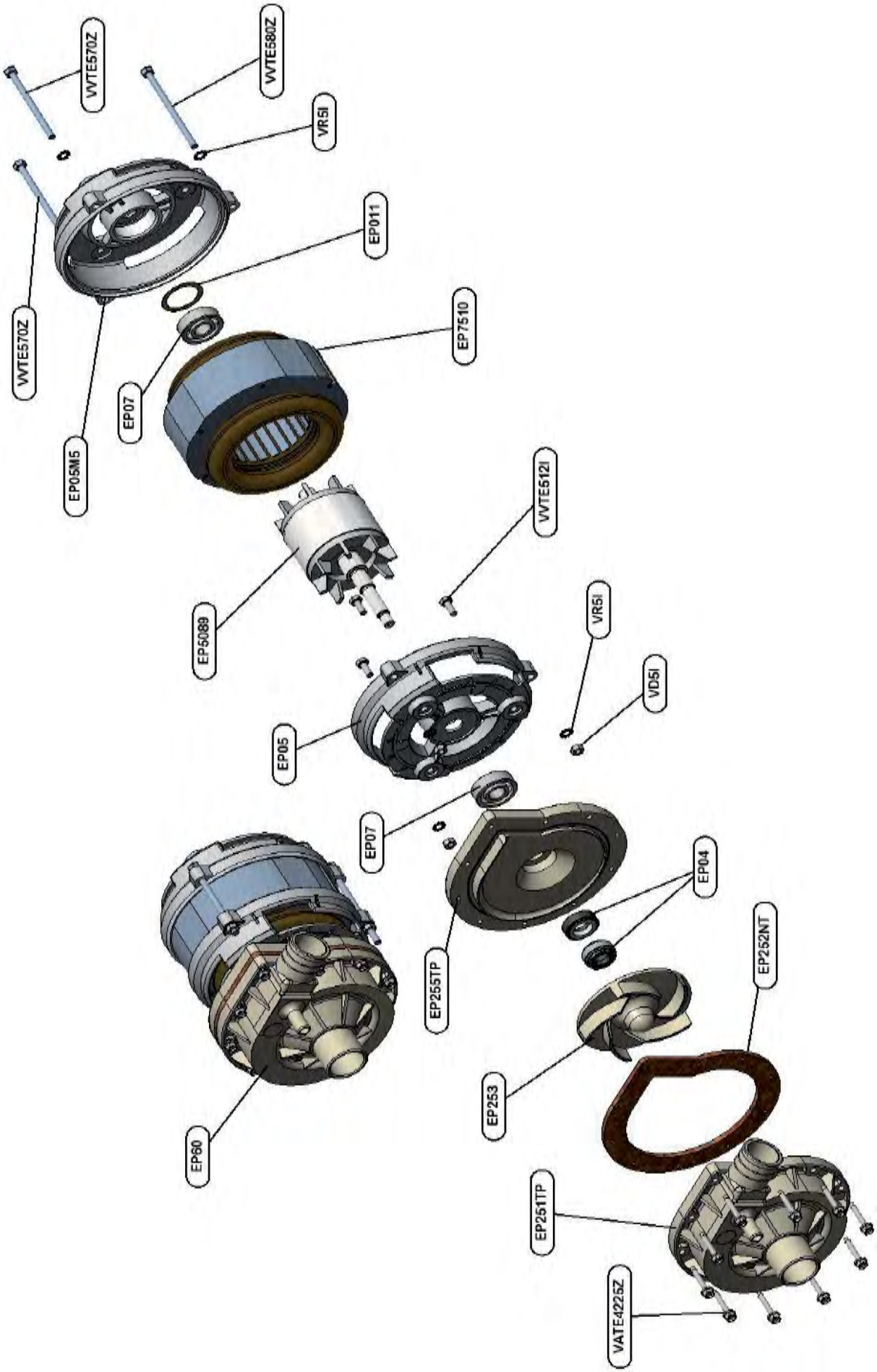
VVTE570Z
VVTE580Z
VR5I
EP011
VVTE570Z
EP7510
EP07
EP05M5
VVTE512I
EP5089
VR5I
VD5I
EP05
EP07
EP04
EP252NT
EP255TP
EP253
EP60
EP251TP
VATE4225Z

Q_40

DS15A
DS15
DS06M3
DS4
G16221F
DS10NT
DS8S
OR422
DS3
DSAM3NT
DS8S
DS24
VVTCC445Z
DSVNR12
G16221F
VVTCC445Z
OR103
OR103
DSVNR13
DSVNR16
DSVNR14
G16221F
DS1
DSVNR17NT

Q_40

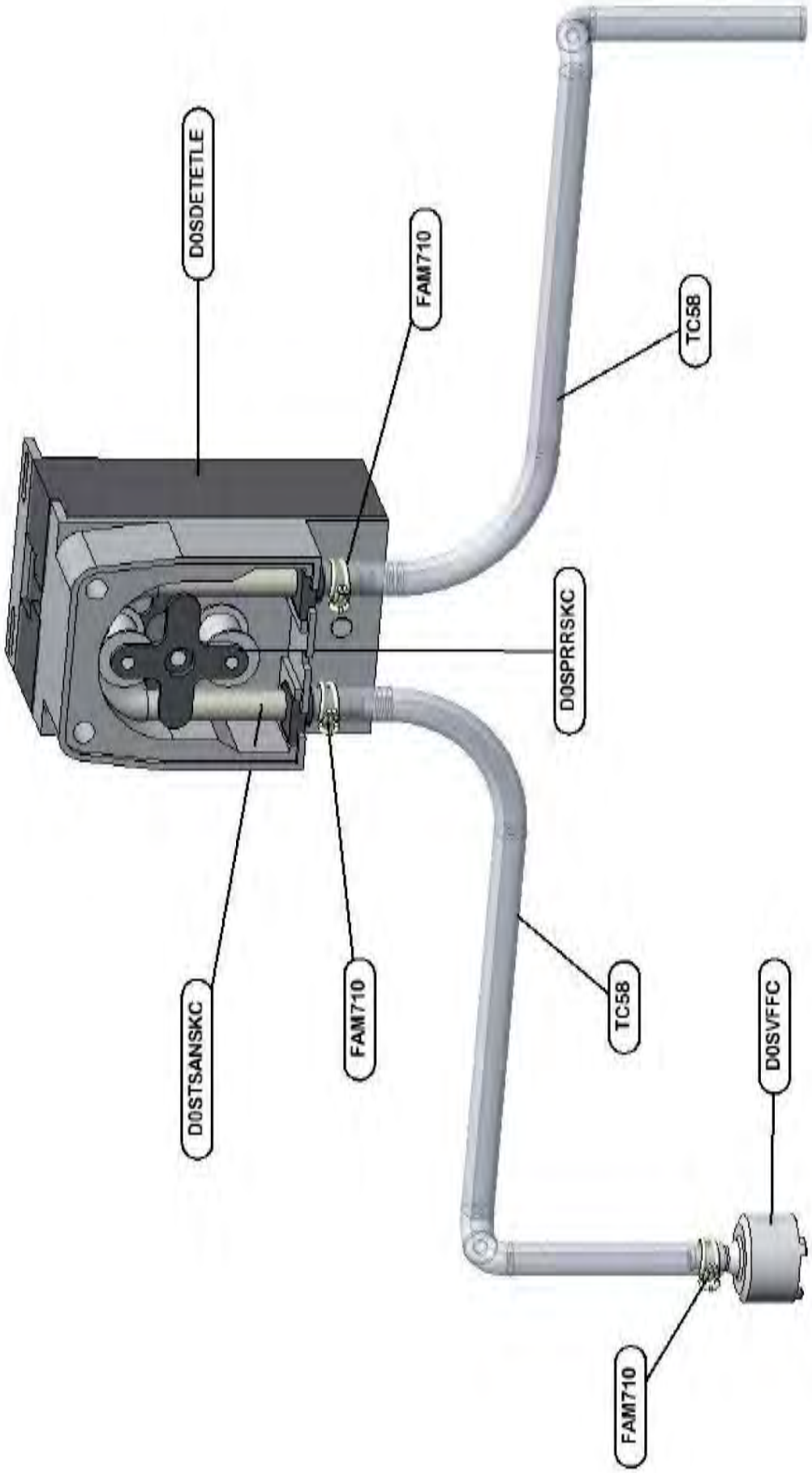
D0SDETETLE
FAM710
TC58
D0SPRRSKC
D0STSANSKC
FAM710
TC58
D0SVFFC
FAM710

Rozkres

Q_40

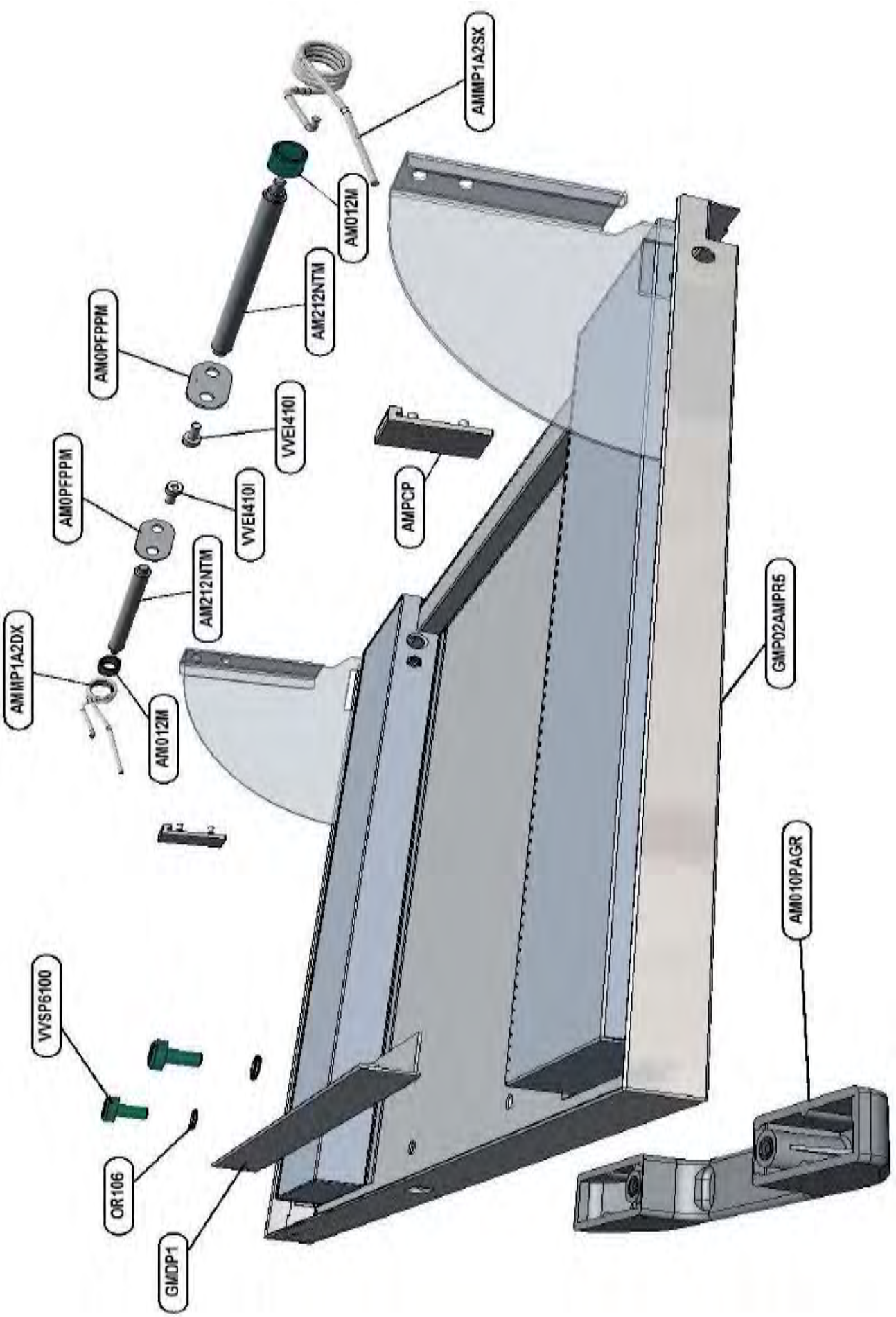
AMMP1A2SX
AM012M
AM212NTM
AM0PFPPM
VVEI410I
AMPCP
AM0PFPPM
VVEI410I
AM212NTM
AMMP1A2DX
AM012M
GMPD2AMPR5
AM010PAGR
VVSP6100
OR106
GMDP1

Rozkres

Q_40

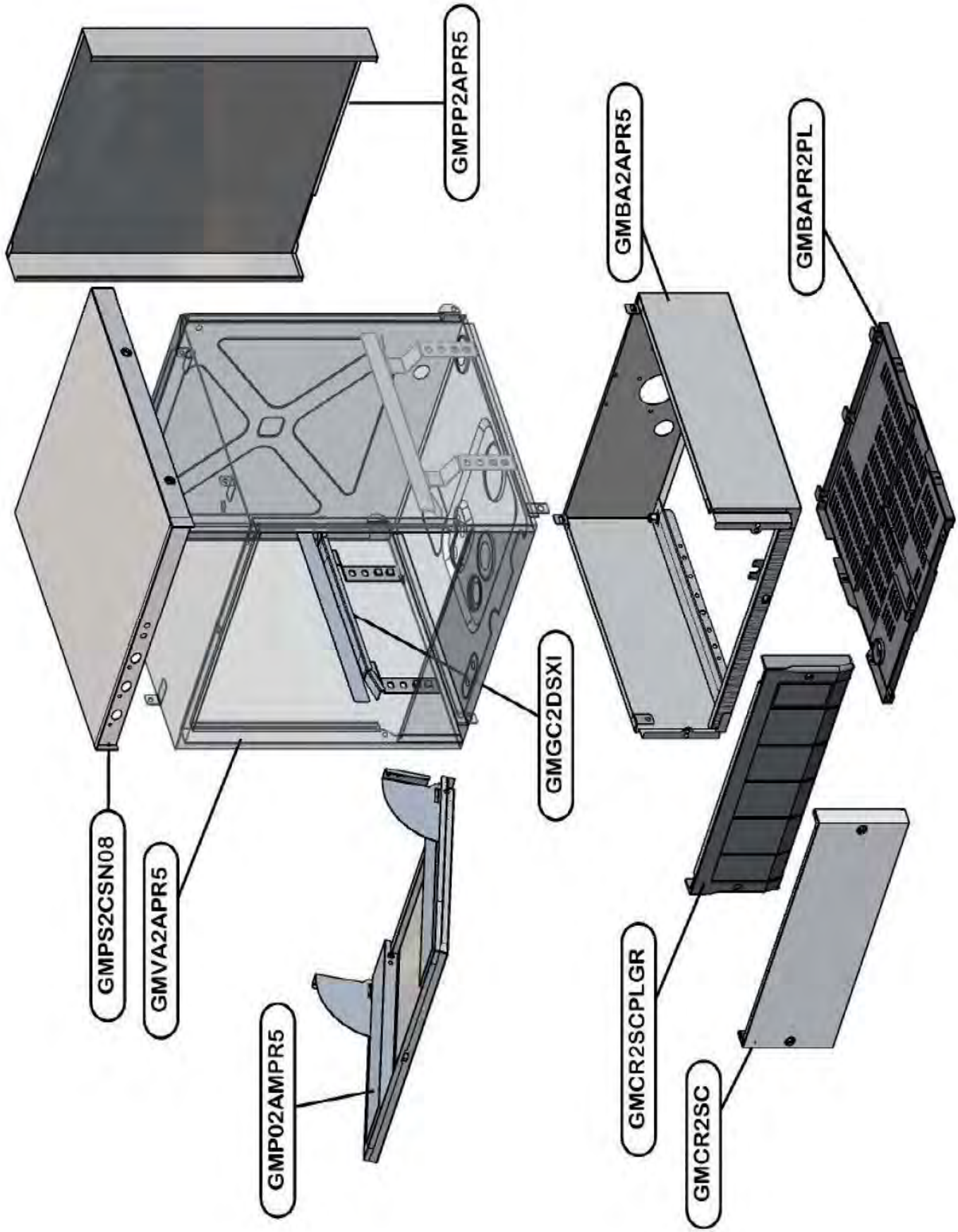
GMPP2APR5
GMBA2APR5
GMBAPR2PL
GMPS2CSN08
GMVA2APR5
GMGC2DSXI
GMP02AMPR5
GMCR2SCPLGR
GMCR2SC

Rozkres

Q_40
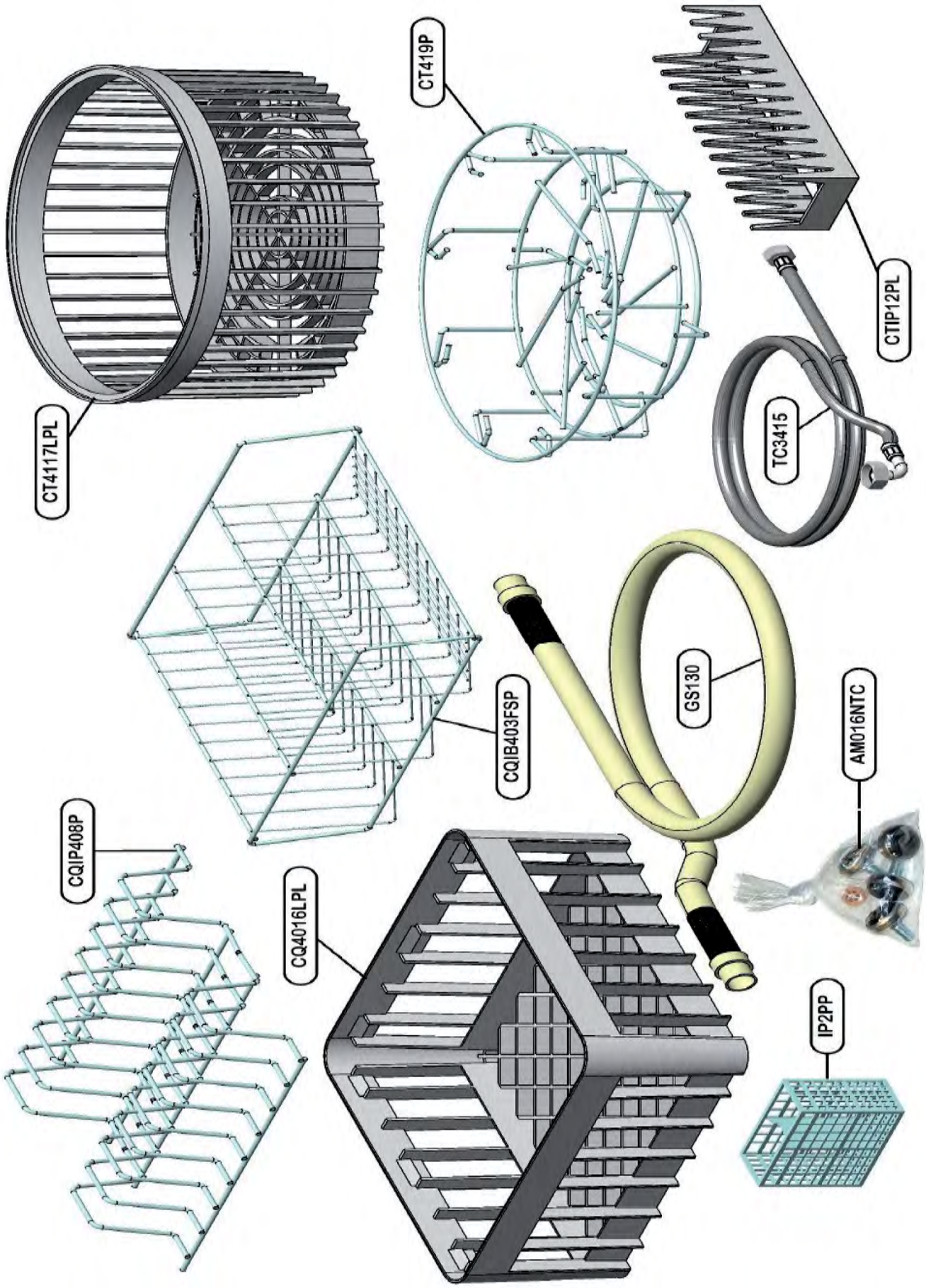
REDFOX®
RM GASTRO GROUP